数字温度控制器

RS100/RS400 使用说明书

IMR02Y04-X3

All Rights Reserved, Copyright © 2015, RKC INSTRUMENT INC.

请使用本产品之前，仔细阅读本书，在理解内容的基础上使用。另外，请妥善保管本书，以便需要时活用本书。

本书对 RS100/RS400 的使用进行了简单说明。

有关详细的使用、操作以及通信等选配功能、请参照另册的 **RS100/RS400 使用说明书 (IMR02Y06-C□)**。可从本公司的主页下载别册。
网址: https://www.rkcinst.co.jp/chinese/download-center/

警 告

- 为防止由本产品的故障或异常所造成的系统重大事故，请于外部设置合适的保护电路。
- 全部的配线结束之前，请不要接通电源。否则将会造成触电/火灾/故障。
- 请不要在本产品所记载的规格范围之外使用。否则将会造成火灾/故障。
- 请勿在有引火性/爆炸性气体的场所使用本产品。
- 请不要触碰电源端子等高电部位。否则有触电的危险。
- 请不要分解、修理和改造本产品。否则将会造成触电/火灾/故障。

注 意

- 本产品的目的是用于产业机械、工作机械、测量器械。
  (请勿用于原子能设备和与人身相关的医疗器械)
- 本产品属于 A 级别仪器。本产品在家庭环境内，有可能引起电波干扰。此时，请使用者采取充分的措施。
- 本产品通过强化绝缘，进行了触电保护。将本产品安装到设备以及配线时，请遵从该设备适合的规格的要求。
- 如本产品中的所有输入/输出信号线，如在屋内的配线长度超过 30 m 时，为防止浪涌，请设置合适的浪涌抑制电路。此外，在室外配线时，与配线长度无关，都请设置适当的抑制浪涌的回路装置。
- 本产品是以安装在测量盘面上使用为前提而生产的，为了避免用户接近电源端子等高电压部位，请在最终产品上采取必要措施。
- 请务必遵守本说明书所记载的注意事项。否则，一旦使用，则有可能导致重大伤害或事故。另外，若不遵从本书的指示，有可能会损坏本仪器中所具备的保护装置。
- 进行配线时，请遵照各地域的规定。
- 为了防止因本仪器的故障导致的损伤，请在与本仪器连接的电源线或大电流容量的输入输出线上，用有充分的遮断容量的、适当的过电流保护器件 (保险丝以及遮断器等) 方法来进行电路保护。
- 因为本产品的故障，会导致不能控制，或者不能发出警报输出的情况，因此可能危及和本产品相连接的设备。请对最终产品采取适当的措施，即使本产品发生故障也能保证安全。
- 请不要将金属片或导线碎屑混入本产品中，否则可能导致触电、火灾、故障。
- 请按照所记载的力矩牢固地拧紧端子螺丝，如果不牢固地拧紧，有可能导致触电、火灾。
- 为了不妨碍散热，使用时请不要堵塞本仪器的周围。另，请不要堵塞通风口。
- 请不要在不使用的端子上接任何线。
- 清洗本产品时请务必切断电源之后再进行清洁。
- 请用柔软的干布擦拭本产品的污渍。再者，请不要使用稀释剂类的物品。有可能会导致变形、变色。
- 请不要用硬物擦拭、敲打显示部。

使用前

- 使用本书的前提条件为，读者需具备与电器、控制、计算机、通信等相关的基础知识。
- 本书中所使用的图示和数值例、画面例，是以易于理解本书的方式来记载的，因此无法保证此结果的操作性。
- 即使用户或第三者蒙受如下损害，本公司也概不负责。
  - 使用本产品的结果带来的影响损害
  - 本公司无法预测的本产品缺陷而导致的损害
  - 使用本产品的仿制品而造成的损害
  - 其他全部间接的损害
- 为了使本产品可持续地、安全地使用，需要定期保养。本产品的搭载构件中有寿命固定的，也有随时间劣化的。
- 本书的记载内容，可能在未经通知下更改。本书力图提供正确无误的内容，但若书中出现您有疑问之处，请与本公司联络。
- 禁止转载、复制本书的一部分或全部。
- 以下为本产品中所使用的记号。
  ～: 交流
  □: 强化绝缘
  ⚠: 安全上的注意事项
  为保护操作员和仪器，在需要参照使用说明书的部位附加有以上记号。在使用时，必须阅读本书的注意事项。

1. 安 装

警 告

为了防止触电及仪器故障，请务必在切断电源后，再进行本仪器的安装、拆除。

1.1 安装上的注意事项

(1) 本仪器适用于以下的环境标准。**(IEC 61010-1)**
[过电压分类Ⅱ、污染度 2]

(2) 请在以下的周围温度、周围湿度、设置环境条件的范围内使用。
- 容许的周围温度: –10～+55 °C
- 容许的周围湿度: 5～95 %RH (绝对湿度: MAX. W. C 29 g/m³ dry air at 101.3 kPa)
- 设置环境条件: 室内使用
  高度到 2000 m 为止
  短期暂态过电压: 1440 V
  长期暂态过电压: 490 V

(3) 请特别避免安装在如下场所。
- 温度急剧变化导致结露的场所
- 产生腐蚀性气体、可燃性气体的场所
- 会直接对本体造成震动、冲击的场所
- 会受到水、油、药品、蒸汽、热气侵蚀的场所
- 尘埃、盐分、铁分多的场所
- 感应障碍大，易产生静电、磁气、杂讯的场所
- 直接受到冷暖气设备的空气直吹的场所
- 直接受到阳光照射的场所
- 会产生由辐射热量等引起的热量积蓄的场所

(4) 进行安装时，请考虑如下事项。
- 考虑到接线、维护、耐环境方面，请确保仪器上下有 50 mm 以上的空间。
- 请避免安装在散热量大的仪器 (加热器、变压器、半导体操作器、大容量电阻) 的正上方。
- 周围温度达 55 °C 以上时，请用强制风扇或空调冷却。但是，请不要使冷空气直接接触本仪器。
- 为提高耐杂讯性能和安全性，安装请尽可能远离高压仪器、动力线、动力仪器。
  高压仪器: 请不要安装于同一盘内。
  动 力 线: 请分开 200 mm 以上进行安装。
  动力仪器: 请尽可能分开安装。
- 请水平安装。倾斜安装的话，会造成误动作。

(5) 请在本产品附近并马上能操作的地方，设置开关和电路断路器。另外，请标明这些是用于本仪器的遮断器件。

1.2 外形尺寸

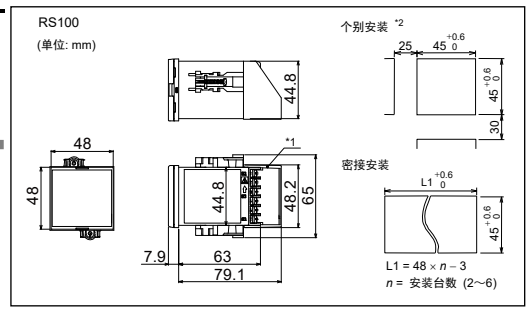

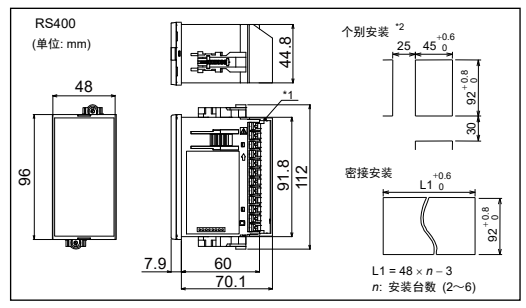

对应盘面厚度: 1～10 mm (密接安装时请考虑盘面强度)

*1 端子盖 (选配) [另售]
*2 个别安装的情况下，在盘面上打安装孔时，请注意不要使盘面开孔面产生毛边/变形、盘面翘曲的情况。

1.3 安装方法 / 拆卸方法

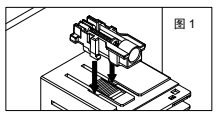

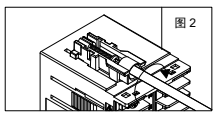

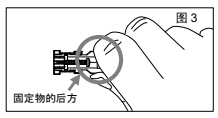

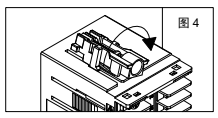

<安装到盘面>
1. 在盘面上开安装孔。
2. 将本仪器从盘面前面插入。
3. 将安装支架插入本仪器的固定口。(图 1)
   此时，请勿将安装支架推向前方。
4. 使用十字螺丝起子拧紧安装支架的螺丝，以使安装支架在插入位置不会向前方移动。(图 2)
   如果螺丝的前端接触到盘面，请将螺丝只拧紧 1 圈。
5. 请参照如上步骤 3、4，安装其余的安装支架。

<从盘面上拆卸>
1. 关闭电源。
2. 拆除配线。
3. 拧松安装支架的螺丝。
4. 捏住安装支架的后方 (图 3)，使其沿水平方向旋转，从外壳上拆下安装支架。(图 4)
5. 请参照如上步骤 3、4，拆卸其余的安装支架。
6. 抓住本仪器的前面板的边框，将其从安装孔取出来。

2.1 端子构成

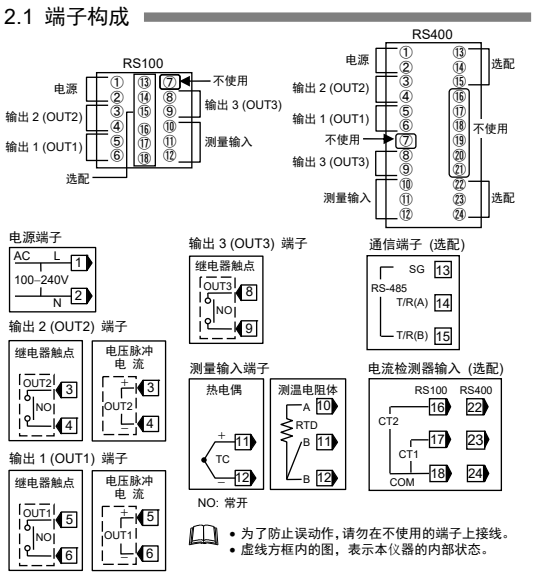

- 为了防止误动作，请勿在不使用的端子上接线。
- 虚线方框内的图，表示本仪器的内部状态。

2. 配 线

警 告

为了防止触电及仪器故障，在配线全部完成前请勿接通电源。此外，在为本仪器通电前请务必确认配线是否正确。

2.2 配线上的注意事项

- 热电偶输入时，请使用规定的补偿导线 。
- 测温电阻输入时，请使用导线电阻小，且 3 线之间 (3 线式) 没有电阻差的线材。
- 为了避免输入信号线受杂波干扰的影响，请远离仪器电源线、动力电源线、负载线进行配线。
- 对仪器电源配线时，请避免来自动力电源的杂波干扰的影响。在容易受到杂波干扰影响的情况，推荐使用电源滤波器。
  - 请使用双绞线。双绞的间距越短，抗杂波干扰效果越好。
  - 请务必把电源滤波器安装在接地的盘上，而且使电源滤波器输出侧与电源端子的配线最短。
  - 如在电源滤波器输出侧安装安装保险丝、开关等，则会导致滤波器效果变差，因此请勿安装电源滤波器。
- 电源接通时，触点输出的准备时间约需要 5 秒。如果作为外部的联锁装置等的信号使用时，请使用延时继电器。
- 请使用电压降小的双绞线作为电源线。
- 本产品不带过电流保护设备 (保险丝)。为了安全如需要时，请另行安装。
  - 保险丝种类: 延时保险丝
  - 保险丝额定值: 额定电压 250 V、额定电流 1 A
- 请使用与螺丝尺寸相符的压着端子。
  端子螺丝尺寸: M3 × 7 (5.8 × 5.8 带角座)
  推荐拧紧力矩: 0.4 N·m
  适用线材: 0.25～1.65 mm² 的单线或捻线
  指定尺寸: 参照右图
  指定压着端子: 带绝缘圆形端子 V1.25–MS3
  日本压着端子制造 (株) 制造

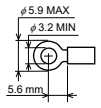

- 请注意勿将压着端子等的导体部分与邻接的导体部分 (端子等) 接触。

如不使用推荐尺寸的压着端子，则有可能无法拧紧端子螺丝。此时，请预先折弯压着端子，然后再进行配线。过度拧紧螺丝会导致螺丝损坏。

在一个端子螺丝上，最多接 2 个压着端子，可用搭桥线。但是，此时，不能对应强化绝缘。

拧本仪器的端子螺丝时，请像右图那样，注意其角度。另，如拧螺丝时用力过大，则会导致螺丝纹路损坏，请注意。

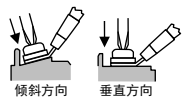

关于本仪器的绝缘块，请参照如下。

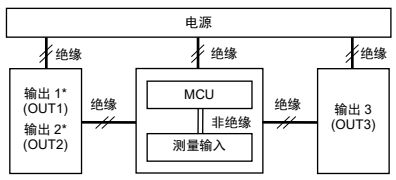

* 输出 1 或输出 2 是继电器触点输出时为 “绝缘”。
两者都不是继电器触点输出时为 “非绝缘”。

3. 各部分名称

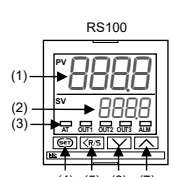

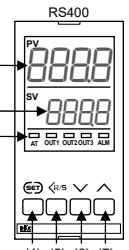

请用手指进行按键操作。
如用前端带尖的工具按键，将会导致故障。

(1)	测量值 (PV) 显示器	[绿]	显示测量值 (PV) 或各种参数记号。
(2)	设定值 (SV) 显示器	[橙]	显示设定值 (SV) 或各种参数的设定值。
(3)	AT 灯	[绿]	在执行自整定 (AT) 期间闪烁。 (AT 结束：AT 灯灭) 执行启动整定 (ST) 期间灯亮。 (ST 结束：AT 灯灭)
	OUT1 灯	[绿]	控制输出 (加热侧) [1] ON 时亮灯 [2]。
	OUT2 灯	[绿]	控制输出 (冷却侧) [1] ON 时亮灯 [2]。
	OUT3 灯	[绿]	警报 1 输出 [1] ON 时亮灯。
	ALM 灯	[红]	在发生警报 1 或警报 2 中任意一个时亮灯。
(4)	设置 (SET) 键		用于调出参数或登记设定值。
(5)	移位键		用于设定更改时的数位移动。 用于 RUN/STOP 和各模式的切换操作。
(6)	下调键		用于减少数值时。
(7)	上调键		用于增加数值时。

[1] 通过初始设定模式进行输出的配置。具体请参照另册的 **RS100/RS400 使用说明书 (IMR02Y06-C□)**。
[2] 电流输出时的灯显示: 输出 0 %以下: 灯灭
输出 100 %以上: 灯亮
输出超过 0 %且不到 100 %: 灯暗亮

4. 操作流程

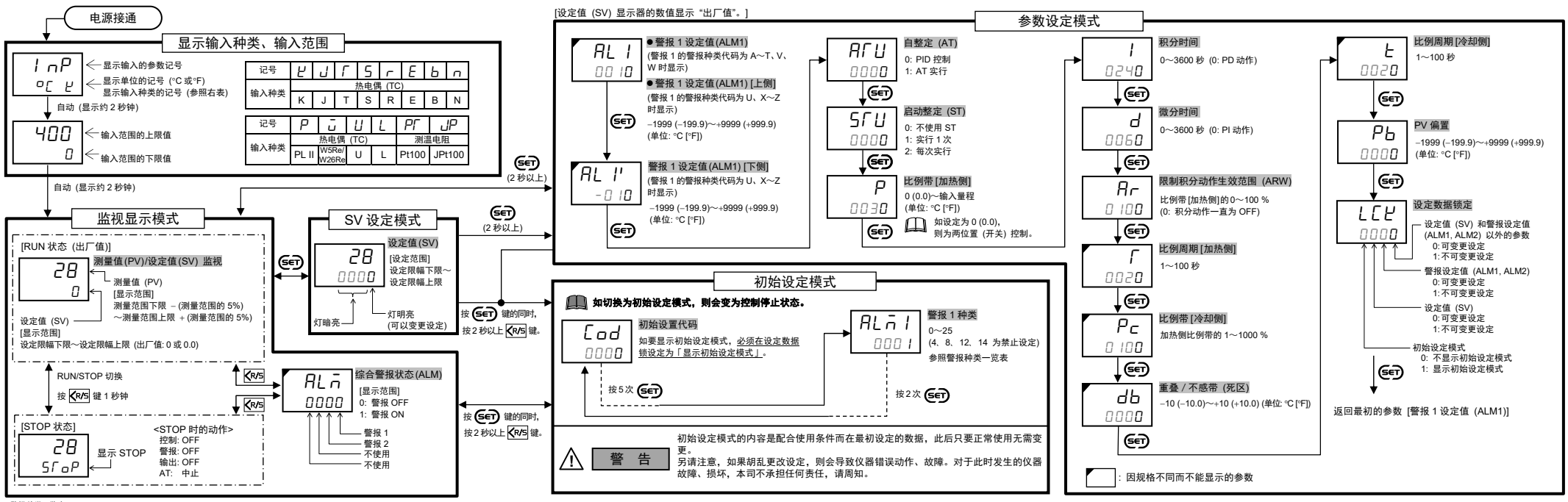

警报种类一览表

设定	代码	种类
0	N	无警报
1	A	上限偏差
2	C	上下限偏差
3	H	上限输入值
5	B	下限偏差
6	D	范围内
7	J	下限输入值
9	Q	带再待机的上限偏差
10	T	带再待机的上下限偏差
11	K	带待机的上限输入值
13	R	带再待机的下限偏差
15	L	带待机的下限输入值
16	X	上下限偏差 (上限/下限个别设定)
17	U	范围内 (上限/下限个别设定)
18	Z	带再待机的上下限偏差 (上限/下限个别设定)
19	E	带待机的上限偏差
20	G	带待机的上下限偏差
21	F	带待机的下限偏差
22	Y	带待机的上下限偏差 (上限/下限个别设定)
23	V	上限设定值
24	W	下限设定值
25	4	运行中的监视器
26	2	控制回路断线警报 (LBA) (仅警报2的场合可选择)

■ 关于设定值的变更与登录
- **可设定明点灯的位。通过按移位键可移动灯明亮的位。**
- **仅操作上调键，下调键不能登录变更的数据。登录变更的数据时，请务必按 SET 键。显示切换至下个参数。**
- **变更设定后，如果不进行登录操作经过了 1 分钟，则会返回至监视显示模式 (初始设定模式除外)。此时，变更的数据没有被登录。**

5. 规 格

■ 测量输入

热电偶输入: K、J、T、S、R、E、B、N (JIS C1602-1995)
PLII (NBS)、W5Re/W26Re (ASTM-E988-96)
U、L (DIN43710-1985)

测温电阻输入: Pt100 (JIS C1604-1997)、JPt100 (JIS C1604-1997、JIS C1604-1981 的 Pt100)

输入精度:

输入种类	输入范围	精 度
K、J、T、E、PLII、U、L	小于–100 °C	±(2.0 °C + 1 digit)
	–100 °C 以上，小于+500 °C	±(1.0 °C + 1 digit)
*1	+500 °C 以上	±(显示值的 0.2 % + 1 digit)
R、S、N、W5Re/W26Re *2	小于 0 °C	±(4 °C + 1 digit)
	0 °C 以上，小于 1000 °C	±(2 °C + 1 digit)
	1000 °C 以上	±(显示值的 0.2 % + 1 digit)
B *2	小于 400 °C	±(70 °C + 1 digit)
	400 °C 以上	±(2 °C + 1 digit)
Pt100、JPt100	小于 200 °C	±(0.4 °C + 1 digit)
	200 °C 以上	±(显示值的 0.2 % + 1 digit)

*1: 小于–100 °C 时为精度保证范围外
*2: 小于 400 °C 时为精度保证范围外 (热电偶 R、S、W5Re/W26Re、B)

取样周期: 0.25 秒

■ 输 出

继电器触点输出(1) [RS100 的 OUT1、2、3: 控制输出，RS400 的 OUT3: 控制输出]
触点方式: 1a 触点
触点容量 (电阻负荷): AC 250 V 3 A、DC 30 V 1 A
电气寿命: 10 万次以上 (额定负载)
机械寿命: 2000 万次以上 (开关频度: 300 次/min)

继电器触点输出(2) [RS400 的 OUT1、2: 控制输出]
触点方式: 1a 触点
触点容量 (电阻负荷): AC 250 V 3 A、DC 30 V 1 A
电气寿命: 30 万次以上 (额定负载)
机械寿命: 5000 万次以上 (开关频度: 180 次/min)

继电器触点输出(3) [RS100 及 RS400: 警报输出]
触点方式: 1a 触点
触点容量 (电阻负荷): AC 250 V 1 A、DC 30 V 0.5 A
电气寿命: 15 万次以上 (额定负载)
机械寿命: 2000 万次以上 (开关频度: 300 次/min)

电压脉冲输出:
输出电压: DC 0/12 V (额定) ON 时: 10～13 V
OFF 时: 0.5 V 以下
容许负荷电阻: 500 Ω以上

电流输出:
输出电流: DC 4～20 mA、DC 0～20 mA
输出范围: DC 3.2～20.8 mA、DC 0～21 mA
容许负荷电阻: 500 Ω以下

■ 一般规格

电源电压: AC 85～264 V [含电源电压变动]
(额定: AC 100～240 V)、50/60 Hz 通用
消耗功率: RS100: 最大 5.1 VA (AC 100 V 时)
最大 7.6 VA (AC 240 V 时)
RS400: 最大 5.9 VA (AC 100 V 时)
最大 8.4 VA (AC 240 V 时)
突入电流: 5.6 A 以下 (AC 100 V 时)
13.3 A 以下 (AC 240 V 时)
停电时的数据保护:
通过不挥发性内存进行数据备份
改写次数: 约 100 万次
质 量: RS100: 约 115 g、RS400: 约 165 g

6. 型号代码

RS100-□□□ ∗□□N/□-□ □□□
RS400 (1)(2)(3) (4)(5)(6) (7) (8) (9)

(1) 输出 1 (OUT1) 种类、(2) 输出 2 (OUT2) 种类
N: 无 7: 电流输出 (DC 0～20 mA)
M: 继电器触点输出 8: 电流输出 (DC 4～20 mA)
V: 电压脉冲输出 (DC 0/12 V)
(3) 输出 3 (OUT3) 种类
N: 无 M: 继电器触点输出
(4) 电流检测器 (CT) 输入 (选配)
N: 无 T: CTL-6-P-N 2 点 U: CTL-12-S56-10L-N 2 点
(5) 通信功能 (选配)
N: 无 5: RS-485 (RKC 通信) 6: RS-485 (MODBUS)
(6) 固定为 “N”
(7) 出厂时设定的指定
N: 无
1: 控制动作 / 输入范围代码，在出厂时有设定
2: 控制动作 / 输入范围代码以及初始设置代码，在出厂时有设定

(8) 控制动作
(9) 测量输入/范围

在 (7) 选择了 “N” 时，可省略 (8) 和 (9)，按以下内容出厂

- 输入范围:
  热电偶 K 0～400 °C
- 控制输出
  控制输出 1 点 (OUT1 是 “M”) 时
  控制动作: 带 AT 的 PID 动作 (逆动作)
  控制输出 2 点 (OUT1 和 OUT2 是 “M”) 时
  控制动作: 带 AT 的加热/冷却 PID 动作
- 警报输出 1 点 (OUT3 是 “M”) 时
  警报种类: 警报 1: 上限偏差
  警报 2: 无

关于 (8) 和 (9) 的内容及初始设置代码，请参照另册 **RS100/RS400 使用说明书 (IMR02Y06-C□)**。

< RoHS 中的 6 种物质的含有情况 >

■ 产品中的有毒有害物质或元素的名称以及含量

部件名称	有毒有害物质或元素					
	铅 (Pb)	汞 (Hg)	镉 (Cd)	6 价铬 (Cr(VI))	多溴联苯 (PBB)	多溴二苯醚 (PBDE)
实装电路板	×	○	○	○	○	○
壳子(包括前盘面)	○	○	○	○	○	○

○: 表示在该器件的全部的均质材料中有毒有害物质含量在 SJ/T 11363-2006 标准规定的限量要求以下。
×: 表示至少在该器件的均质材料中有毒有害物质的含量超出 SJ/T 11363-2006 标准规定的限量要求。

■ 关于产品的识别标识

左面的标识是根据 2006 年 2 月 28 日公布的《电子信息产品污染控制管理办法》以及 SJ/T 11363-2006 《电子信息产品中有毒有害物质的限量要求》，SJ /T 11364- 2006 《电子信息产品污染控制标识要求》，在特定的 6 种物质的含量超过了规定值的产品上所使用的标识。标识中央的数字表示适用于中华人民共和国销售的电子信息产品的**”环保使用期限”**。此项已记载在使用说明书上，表示只要您遵守有关该产品的安全或使用上的注意事项，从生产日期起在此年限内，该产品所含有的有毒有害物质或元素不会发生外泄或突变，用户使用该产品不会对环境造成严重污染或对其人身、财产造成严重损害的期限。另，本公司生产的产品的环保使用期限为 20 年。但是，此环保使用期限不是产品保证期限。

简单的设定例

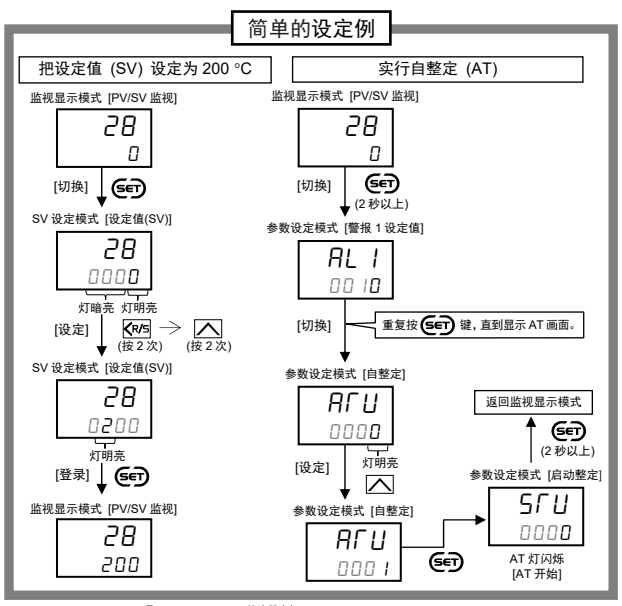

MODBUS 是 Schneider Electric 的注册商标。
本书记载的公司名和商品名一般是各公司的商标和注册商标。

初 版: 2015 年 5 月 [IMQ00]
第 3 版: 2021 年 7 月 [IMQ01]

网址:
https://www.rkcinst.co.jp/chinese/
RKC 理化工业株式会社
RKC INSTRUMENT INC.
公司总部: 日本国东京都大田区久原 5-16-6 邮政编码: 146-8515
电话号码: 03-3751-9799 (+81 3 3751 9799) 电子信箱: info@rkcinst.co.jp

JUL. 2021

Temperature Controller

RS100/RS400 Instruction Manual

IMR02Y04-X3

All Rights Reserved, Copyright © 2015, RKC INSTRUMENT INC.

Thank you for purchasing this RKC product. In order to achieve maximum performance and ensure proper operation of the instrument, carefully read all the instructions in this manual. Please place the manual in a convenient location for easy reference.

For detailed handling procedures and key operations, refer to separate **RS100/RS400 Instruction Manual (IMR02Y06-E□)**.
The manual can be downloaded from the official RKC website:
https://www.rkcinst.co.jp/english/download-center/

WARNING

- To prevent injury to persons, damage to the instrument and the equipment, a suitable external protection device shall be required.
- All wiring must be completed before power is turned on to prevent electric shock, fire or damage to the instrument and the equipment.
- This instrument must be used in accordance with the specifications to prevent fire or damage to the instrument and the equipment.
- This instrument is not intended for use in locations subject to flammable or explosive gases.
- Do not touch high-voltage connections such as power supply terminals, etc. to avoid electric shock.
- RKC is not responsible if this instrument is repaired, modified or disassembled by other than factory-approved personnel. Malfunction may occur and warranty is void under these conditions.

CAUTION

- This product is intended for use with industrial machines, test and measuring equipment. (It is not designed for use with medical equipment and nuclear energy plant.)
- This is a Class A instrument. In a domestic environment, this instrument may cause radio interference, in which case the user may be required to take additional measures.
- This instrument is protected from electric shock by reinforced insulation. Provide reinforced insulation between the wire for the input signal and the wires for instrument power supply, source of power and loads.
- Be sure to provide an appropriate surge control circuit respectively for the following:
  - If input/output or signal lines within the building are longer than 30 meters.
  - If input/output or signal lines leave the building, regardless the length.
- This instrument is designed for installation in an enclosed instrumentation panel. All high-voltage connections such as power supply terminals must be enclosed in the instrumentation panel to avoid electric shock to operating personnel.
- All precautions described in this manual should be taken to avoid damage to the instrument or equipment.
- If the equipment is used in a manner not specified by the manufacturer, the protection provided by the equipment may be impaired.
- All wiring must be in accordance with local codes and regulations.
- To prevent instrument damage as a result of failure, protect the power line and the input/output lines from high currents with a suitable overcurrent protection device with adequate breaking capacity such as a fuse, circuit breaker, etc.
- A malfunction in this product may occasionally make control operations impossible or prevent alarm outputs, resulting in a possible hazard. Take appropriate measures in the end use to prevent hazards in the event of malfunction.
- Prevent metal fragments or lead wire scraps from falling inside instrument case to avoid electric shock, fire or malfunction.
- Tighten each terminal screw to the specified torque found in the manual to avoid electric shock, fire or malfunction.
- For proper operation of this instrument, provide adequate ventilation for heat dissipation.
- Do not connect wires to unused terminals as this will interfere with proper operation of the instrument.
- Turn off the power supply before cleaning the instrument.
- Do not use a volatile solvent such as paint thinner to clean the instrument. Deformation or discoloration may occur. Use a soft, dry cloth to remove stains from the instrument.
- To avoid damage to the instrument display, do not rub with an abrasive material or push the front panel with a hard object.

NOTICE

- This manual assumes that the reader has a fundamental knowledge of the principles of electricity, process control, computer technology and communications.
- The figures, diagrams and numeric values used in this manual are only for explanation purpose.
- RKC is not responsible for any damage or injury that is caused as a result of using this instrument, instrument failure or indirect damage.
- RKC is not responsible for any damage and/or injury resulting from the use of instruments made by imitating this instrument.
- Periodic maintenance is required for safe and proper operation of this instrument. Some components have a limited service life, or characteristics that change over time.
- Every effort has been made to ensure accuracy of all information contained herein. RKC makes no warranty, expressed or implied, with respect to the accuracy of the information. The information in this manual is subject to change without prior notice.
- No portion of this document may be reprinted, modified, copied, transmitted, digitized, stored, processed or retrieved through any mechanical, electronic, optical or other means without prior written approval from RKC.
- Various symbols are used on the equipment, they have the following meaning.
  ∼ : Alternating current ⧈: Reinforced insulation
  ⚠ : Safety precaution
  This symbol is used where the instruction manual needs to be consulted for the safety of operator and equipment. Carefully read the cautions in this manual before using the instrument.

1. MOUNTING

WARNING

To prevent electric shock or instrument failure, always turn off the power before mounting or removing the instrument.

1.1 Mounting Cautions

(1) This instrument is intended to be used under the following environmental conditions. **(IEC 61010-1)** [OVERVOLTAGE CATEGORY II, POLLUTION DEGREE 2]

(2) Use this instrument within the following environment conditions:
- Allowable ambient temperature: −10 to +55 °C
- Allowable ambient humidity: 5 to 95 %RH (Absolute humidity: MAX. W. C 29 g/m³ dry air at 101.3 kPa)
- Installation environment conditions: Indoor use
  Altitude up to 2000 m
  Short-term temporary overvoltage: 1440 V
  Long-term temporary overvoltage: 490 V

(3) Avoid the following conditions when selecting the mounting location:
- Rapid changes in ambient temperature which may cause condensation.
- Corrosive or inflammable gases.
- Direct vibration or shock to the mainframe.
- Water, oil, chemicals, vapor or steam splashes.
- Excessive dust, salt or iron particles.
- Excessive induction noise, static electricity, magnetic fields or noise.
- Direct air flow from an air conditioner.
- Exposure to direct sunlight.
- Excessive heat accumulation.

(4) Mount this instrument in the panel considering the following conditions:
- Ensure at least 50 mm space on top and bottom of the instrument for maintenance and operating environment.
- Do not mount this instrument directly above the equipment that generates large amount of heat (heaters, transformers, semi-conductor functional devices, large-wattage resistors).
- If the ambient temperature rises above 55 °C, cool this instrument with a forced air fan, cooler, etc. Cooled air should not blow directly on this instrument.
- In order to improve safety and the immunity to withstand noise, mount this instrument as far away as possible from high voltage equipment, power lines, and rotating machinery.
  High voltage equipment: Do not mount within the same panel.
  Power lines: Separate at least 200 mm.
  Rotating machinery: Separate as far as possible.
- For correct functioning mount this instrument in a horizontal position.

(5) In case this instrument is connected to a supply by means of a permanent connection, a switch or circuit-breaker shall be included in the installation. This shall be in close proximity to the equipment and within easy reach of the operator. It shall be marked as the disconnecting device for the equipment.

1.2 Dimensions

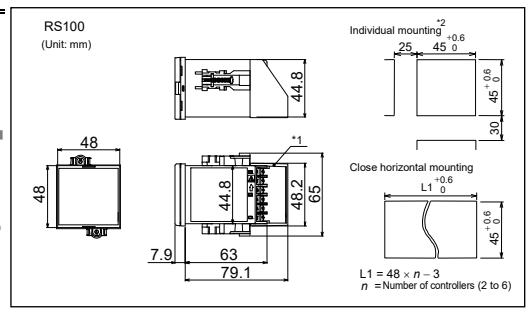

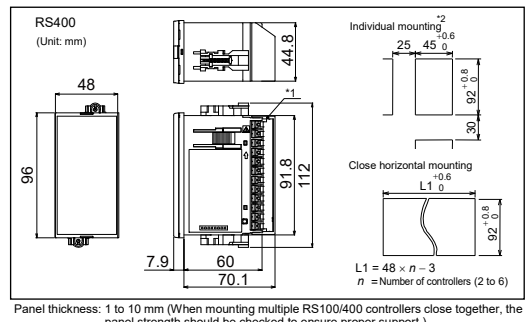

Panel thickness: 1 to 10 mm (When mounting multiple RS100/400 controllers close together, the panel strength should be checked to ensure proper support.)

*1 Terminal cover (optional) [sold separately]
*2 Make sure that the panel surface has no burr or distortion where the hole is to be cut out.

1.3 Procedures of Mounting and Removing

■ Mounting procedures

1. Prepare the panel cutout as specified in **1.2 Dimensions**.
2. Insert the instrument through the panel cutout.
3. Insert the mounting bracket into the mounting groove of the instrument. (Fig. 1)
   Do not push the bracket forcibly forward.
4. Tighten up the screw for the mounting bracket with a Phillips screwdriver so that the mounting bracket is firmly secured in place. (Fig. 2)
   Give the screw another turn when the tip of the screw touches the panel.
5. The other mounting bracket should be installed in the same way as described in ***3*** and ***4***.

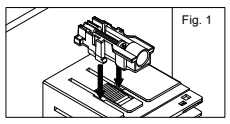
Fig. 1

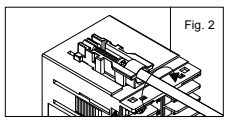
Fig. 2

■ Removal procedures

1. Turn the power OFF.
2. Remove the wiring.
3. Loosen the screw of the mounting bracket.
4. Hold the rear of the mounting bracket (Fig.3), and lift up one side to remove it from the case. (Fig. 4)
5. The other mounting bracket(s) should be removed in the same way as described in ***3*** and ***4***.
6. Pull out the instrument from the mounting cutout while holding the front panel frame of this instrument.

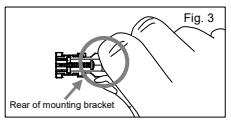

Fig. 3

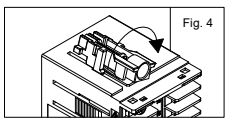
Fig. 4

2. WIRING

WARNING

To prevent electric shock or instrument failure, do not turn on the power until all wiring is completed. Make sure that the wiring is correct before applying power to the instrument.

2.1 Terminal Configuration

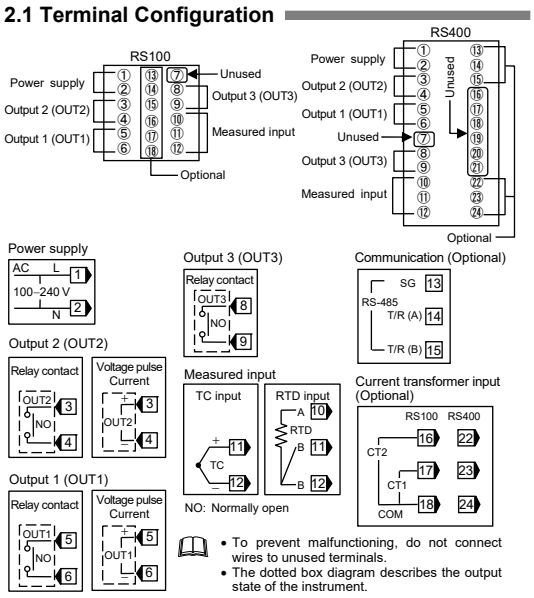

- To prevent malfunctioning, do not connect wires to unused terminals.
- The dotted box diagram describes the output state of the instrument.

2.2 Wiring Cautions

- For thermocouple input, use the appropriate compensation wire.
- For RTD input, use low resistance lead wire with no difference in resistance between the three lead wires.
- To avoid noise induction, keep input signal wire away from instrument power line, load lines and power lines of other electric equipment.
- If there is electrical noise in the vicinity of the instrument that could affect operation, use a noise filter.
  - Shorten the distance between the twisted power supply wire pitches to achieve the most effective noise reduction.
  - Always install the noise filter on a grounded panel. Minimize the wiring distance between the noise filter output and the instrument power supply terminals to achieve the most effective noise reduction.
  - Do not connect fuses or switches to the noise filter output wiring as this will reduce the effectiveness of the noise filter.
- Allow approximately 5 seconds for contact output when the instrument is turned on. Use a delay relay when the output line is used for an external interlock circuit.
- Power supply wiring must be twisted and have a low voltage drop.
- This instrument is not provided with an overcurrent protection device (fuse). If a fuse is required for safety, install close to the instrument.
  - Fuse type: Time-lag fuse
  - Fuse rating: Rated voltage 250 V Rated current: 1 A
- Use the solderless terminal appropriate to the screw size.
  Screw size: M3 × 7 (with 5.8 × 5.8 square washer)
  Recommended tightening torque: 0.4 N·m [4 kgf·cm]
  Applicable wire: Solid/twisted wire of 0.25 to 1.65 mm²
  Specified dimension: Refer to Fig. at the right
  Specified solderless terminal:
  Manufactured by J.S.T MFG CO., LTD.
  Circular terminal with isolation V1.25–MS3

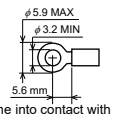

- Make sure that during field wiring parts of conductors cannot come into contact with adjacent conductive parts.

If solderless terminal lugs other than the recommended dimensions are used, terminal screws may not be tightened. In that case, bend each solderless terminal lug before wiring. If the terminal screw is forcibly tightened, it may be damaged.

Up to two solderless terminal lugs can be connected to one terminal screw. However, reinforced insulation cannot be used.

When tightening a screw of the instrument, make sure to fit the screwdriver properly into the screw head mounted tilted or flat as shown in the right figure. Tightening the screw with excessive torque may damage the screw thread.

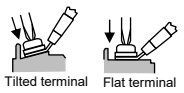

For isolated device input/output blocks, refer to the following:

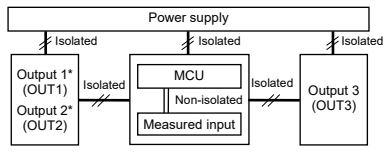

* Outputs are isolated if OUT1 or OUT2 is "relay contact output." If both outputs are not "relay contact output," outputs are not isolated.

3. PARTS DESCRIPTION

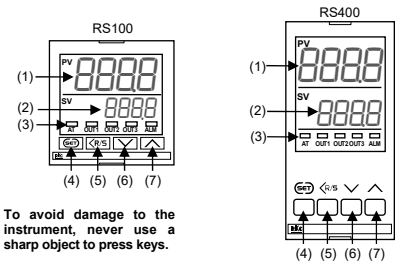

To avoid damage to the instrument, never use a sharp object to press keys.

(1)	Measured value (PV) display [Green]	Displays Measured value (PV) or various parameter symbols.
(2)	Set value (SV) display [Orange]	Displays Set value (SV) or various parameter set values.
(3)	AT lamp [Green]	Flashes when Autotuning (AT) is activated. (After AT is completed: AT lamp will go out) Lights during Startup tuning (ST) execution. (After ST is completed: AT lamp will go out)
	OUT1 lamp [Green]	Lights when Control output (heat-side) [1] is turned on. [2]
	OUT2 lamp [Green]	Lights when Control output (cool-side) [1] is turned on. [2]
	OUT3 lamp [Green]	Lights when Alarm 1 output [1] is turned on.
	ALM lamp [Red]	Lights when Alarm 1 or Alarm 2 is turned on.
(4)	Set (SET) key	Used for calling up parameters and set value registration.
(5)	Shift key	Shift digits when settings are changed. Used to switch RUN/STOP and modes.
(6)	Down key	Decreases numerals.
(7)	Up key	Increases numerals.

[1] Output assignment can be made in the Initial setting mode. For details, refer to separate **RS100/RS400 Instruction Manual (IMR02Y06-E□)**.
[2] Lamp indication becomes as follows for current output.
For an output of less than 0 %: Extinguished
For an output of more than 100 %: Lit
For an output of more than 0 % but less than 100 %: Dimly lit.

4. OPERATING FLOW

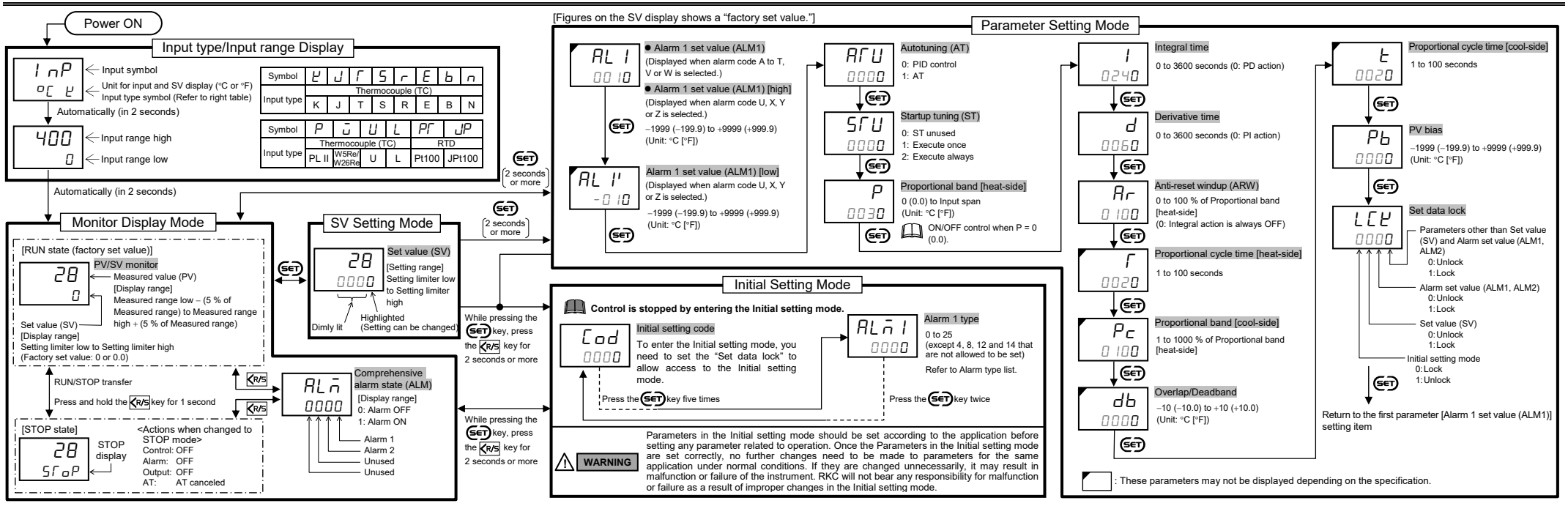

Alarm type list

Set value	Code	Type
0	N	None
1	A	Deviation high
2	C	Deviation high/low
3	H	Process high
5	B	Deviation low
6	D	Band
7	J	Process low
9	Q	Deviation high with re-hold action
10	T	Deviation high/low with re-hold action
11	K	Process high with hold action
13	R	Deviation low with re-hold action
15	L	Process low with hold action
16	X	Deviation high/low (High/Low individual setting)
17	U	Band (High/Low individual setting)
18	Z	Deviation high/low with re-hold action (High/Low individual setting)
19	E	Deviation high with hold action
20	G	Deviation high/low with hold action
21	F	Deviation low with hold action
22	Y	Deviation high/low with re-hold action (High/Low individual setting)
23	V	SV high
24	W	SV low
25	4	Monitor during RUN
26	2	Control loop break alarm (LBA) (Selectable only for Alarm 2.)

■ Set value change and registration

- The highlighted digit indicates which digit can be set. Press the Shift key to go to a different digit. Every time the shift key is pressed, the highlighted digit moves.
- However, the changed data is not stored by the operation of the Up and Down keys alone. In order to store the new parameter value, the SET key must be pressed within 1 minute after the new value is displayed. The new value will then be saved and the display will move to the next parameter.
- If no key operation is performed within 1 minute without pressing the SET key, this instrument returns to the PV/SV monitor screen and the set value will not be changed. (except the Initial setting mode)

5. SPECIFICATIONS

■ Measured input

TC input: K, J, T, S, R, E, B, N (JIS C1602-1995), PLII (NBS), W5Re/W26Re (ASTM-E988-96), U, L (DIN43710-1985)
RTD input: Pt100 (JIS C1604-1997), JPt100 (JIS C1604-1997, Pt100 of JIS C1604-1981)
Input accuracy:

Input type	Input range	Accuracy
K, J, T, E, PLII, U, L *1	Less than −100 °C	±(2.0 °C + 1 digit)
	−100°C or more, Less than +500°C	±(1.0 °C + 1 digit)
	+500 °C or more	±(0.2 % of Reading + 1 digit)
R, S, N, W5Re/W26Re *2	Less than 0 °C	±(4 °C + 1 digit)
	0 °C or more, Less than 1000 °C	±(2 °C + 1 digit)
	1000 °C or more	±(0.2 % of Reading + 1 digit)
B *2	Less than 400 °C	±(70 °C + 1 digit)
	400 °C or more	±(2 °C + 1 digit)
Pt100, JPt100	Less than 200 °C	±(0.4 °C + 1 digit)
	200 °C or more	±(0.2 % of Reading + 1 digit)

*1: Accuracy is not guaranteed for less than −100 °C
*2: Accuracy is not guaranteed for less than 400 °C for input type R, S, W5Re/W26Re and B.

Sampling cycle: 0.25 seconds

■ Output

Relay contact output (1) [OUT1, 2 and 3 of RS100: Control output, OUT 3 of RS400: Control output]:
Contact type: 1a contact
Contact rating (Resistive load): 250VAC 3A, 30VDC 1A
Electrical life: 100,000 times or more (Rated load)
Mechanical life: 20 million times or more (Switching: 300 times/min)

Relay contact output (2) [OUT1 and 2 of RS400: Control output]:
Contact type: 1a contact
Contact rating (Resistive load): 250VAC 3A, 30VDC 1A
Electrical life: 300,000 times or more (Rated load)
Mechanical life: 50 million times or more (Switching: 180 times/min)

Relay contact output (3) [RS100 and RS400: Alarm output]:
Contact type: 1a contact
Contact rating (Resistive load): 250VAC 1A, 30VDC 0.5A
Electrical life: 150,000 times or more (Rated load)
Mechanical life: 20 million times or more (Switching: 300 times/min)

Voltage pulse output:
Output voltage: 0/12 V DC (Rated) ON voltage: 10 to 13 V OFF voltage: 0.5 V or less
Allowable load resistance: 500 Ω or more

Current output:
Output current: 4 to 20 mA DC, 0 to 20 mA DC
Output range: 3.2 to 20.8 mA DC, 0 to 21 mA DC
Allowable load resistance: 500 Ω or less

■ General specifications

Power supply voltage: 85 to 264 V AC [Including power supply voltage variation] (Rating: 100 to 240 V AC), 50/60 Hz
Power consumption: RS100: 5.1 VA max. (at 100 V AC) 7.6 VA max. (at 240 V AC)
RS400: 5.9 VA max. (at 100 V AC) 8.4 VA max. (at 240 V AC)
Rush current: 5.6 A or less (at 100 V AC) 13.3 A or less (at 240 V AC)
Memory backup: Backed up by non-volatile memory Number of writing: Approx. 1,000,000 times
Weight: RS100: Approx. 115 g RS400: Approx. 165 g

6. MODEL CODE

RS100 -□□□∗□□N/□-□ □□□
RS400 (1)(2)(3) (4)(5)(6) (7) (8) (9)

(1) Output 1 (OUT1), (2) Output 2 (OUT2)
N: None
M: Relay contact output
V: Voltage pulse output (0/12 V DC)
7: Current output (0 to 20 mA DC)
8: Current output (4 to 20 mA DC)

(3) Output 3 (OUT3)
N: None M: Relay contact output

(4) Current transformer (CT) input (optional)
N: None T: CTL-6-P-N 2 points
U: CTL-12-S56-10L-N 2 points

(5) Communication (optional)
N: None 5: RS-485 (RKC communication)
6: RS-485 (Modbus)

(6) Fixed "N"

(7) Quick start code
N: Quick start code not specified 1: Specify quick start code 1
2: Specify quick start code 1 and 2

(8) Control method
(9) Measured input and Range

In case "N" is specified for (7), items (8) and (9) will be configured as follows.

- Input range: TC input: Type K 0 to 400 °C
- Control output:
  - Number of control output: 1 point (when OUT1 is "M")
    Control method: PID control with AT (Reverse action)
  - Number of control output: 2 points (when OUT1and OUT2 are "M")
    Control method: Heat/Cool PID control with AT
- Number of alarm output: 1 point (when OUT3 is "M")
  Alarm type: Alarm 1: Deviation high
  Alarm 2: None

For the details of (8) and (9) as well as the Initial setting code, refer to the separate **RS100/RS400 Instruction Manual (IMR02Y06-E□)**.

Quick setting example

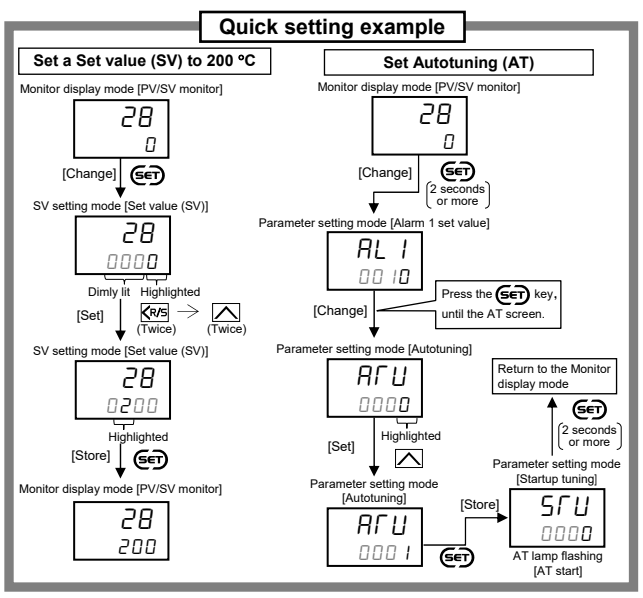

Modbus is a registered trademark of Schneider Electric.
Company names and product names used in this manual are the trademarks or registered trademarks of the respective companies.

The first edition: MAY 2015 [IMQ00]
The third edition: JUL. 2021 [IMQ01]

Website: https://www.rkcinst.co.jp/english/
RKC INSTRUMENT INC.
HEADQUARTERS: 16-6, KUGAHARA 5-CHOME, OHTA-KU TOKYO 146-8515 JAPAN
PHONE: 03-3751-9799 (+81 3 3751 9799)
E-mail: info@rkcinst.co.jp

JUL. 2021